PSOC™ Edge E84 Glasses WLB154

CONTENTS

PAGE	DESCRIPTION
01	TITLE PAGE
02	BLOCK DIAGRAM
03	MCU POWER SECTION
04	MCU SIGNAL_1
05	MCU SIGNAL_2
06	MCU MISCELLANEOUS
07	SMIF INTERFACE
08	AMICs & DMICs
09	RADIO PMU TOPOLOGY_1
10	RADIO PMU TOPOLOGY_2
11	RADIO SYSTEM SECTION
12	RADIO RF SECTION
13	RADIO RF FRONT END
14	MAGNETOMETER, IMU
15	CAPSENSE COPROCESSOR ARCHES
16	MICRO SD CARD
17	REVISION HISTORY

Legal Disclaimer :
The information given in this document shall in no event be regarded as a guarantee of conditions or characteristics. With respect to any examples or hints given herein, any typical values stated herein and/or any information regarding the application of the device, Infineon Technologies hereby disclaims any and all warranties and liabilities of any kind, including without limitation, warranties of non-infringement of intellectual property rights of any third party.

SCH Title : KIT-55913-PROTO

Page Title: Title Page

Size	Document Number	Drawn By	Approved By	Rev
A3		DEEPAK	ASHUTOSH	0.1

Date: Tuesday, June 02, 2026 Sheet 1 of 17

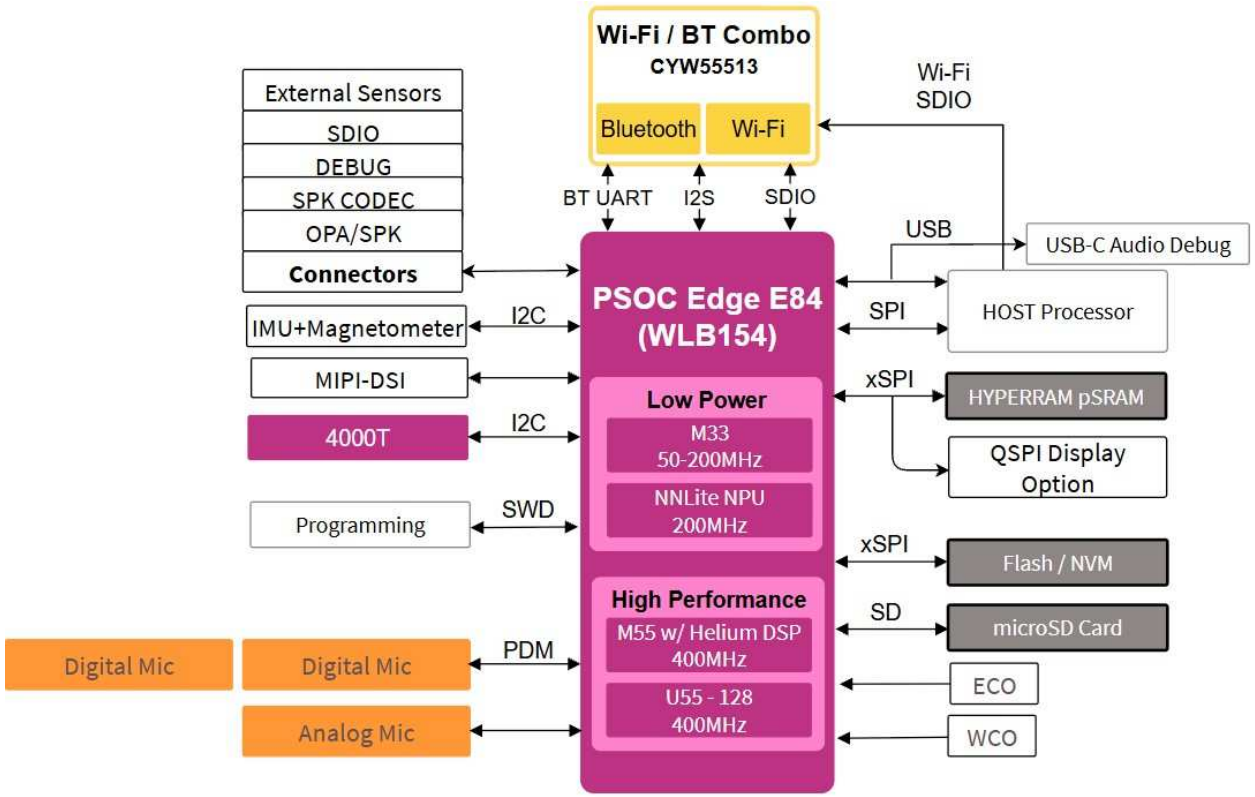

Legal Disclaimer :
The information given in this document shall in no event be regarded as a guarantee of conditions or characteristics. With respect to any examples or hints given herein, any typical values stated herein and/or any information regarding the application of the device, Infineon Technologies hereby disclaims any and all warranties and liabilities of any kind, including without limitation, warranties of non-infringement of intellectual property rights of any third party.

SCH Title : PSOC™ Edge E84 Glasses WLB154				
Page Title: BLOCK DIAGRAM				
Size	Document Number	Drawn By	Approved By	Rev
A3				0.1
Date: Tuesday, June 09, 2026			Sheet 2 of 17	

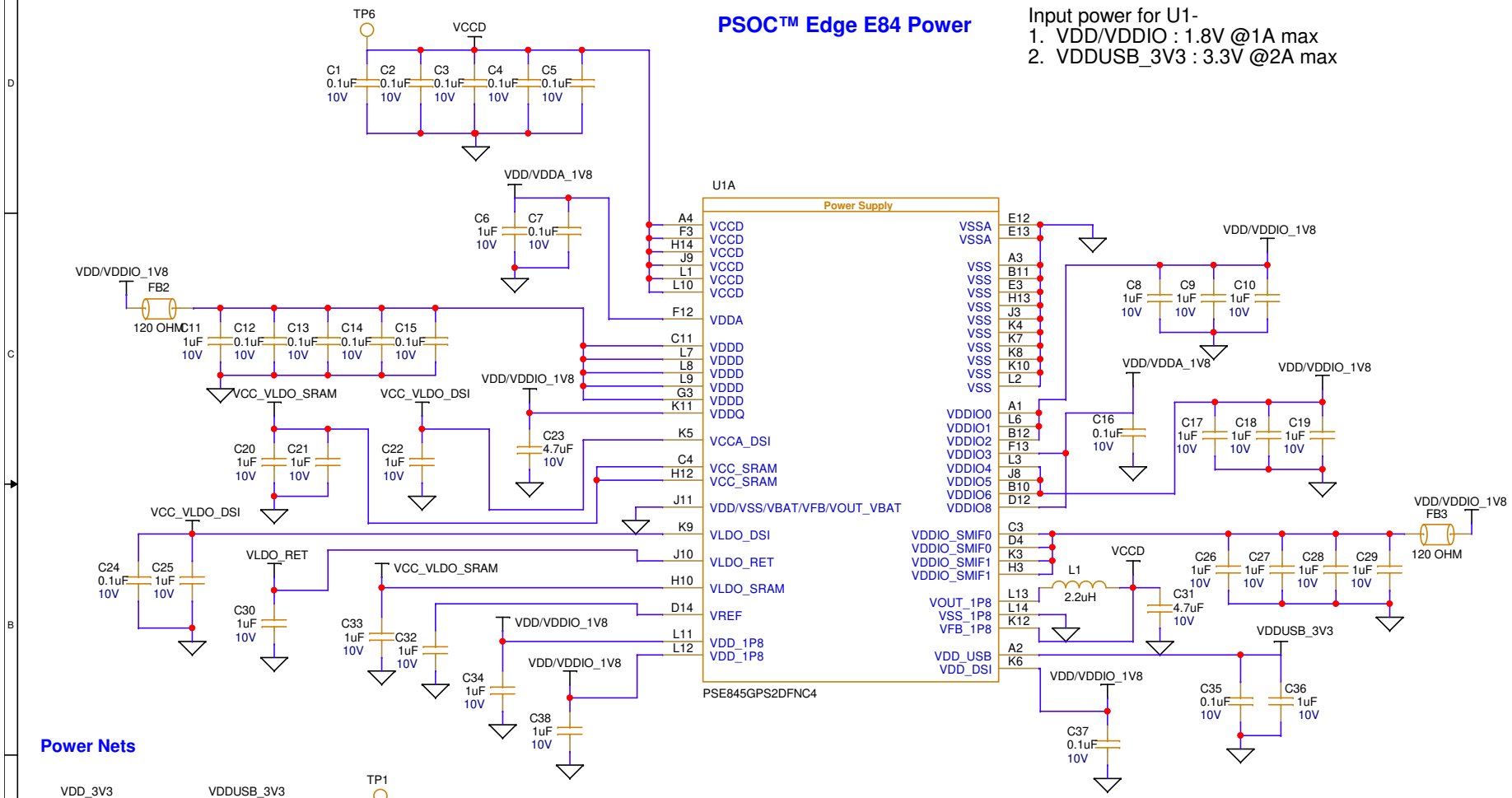
PSOC™ Edge E84 Power
Input power for U1-
1. VDD/VDDIO : 1.8V @1A max
2. VDDUSB_3V3 : 3.3V @2A max
U1A
Power Supply
PSE845GPS2DFNC4
VCCD
VDDA
VDDD
VDDQ
VCCA_DSI
VCC_SRAM
VDD/VSS/VBAT/VFB/VOUT_VBAT
VLDO_DSI
VLDO_RET
VLDO_SRAM
VREF
VDD_1P8
VSSA
VSS
VDDIO0
VDDIO1
VDDIO2
VDDIO3
VDDIO4
VDDIO5
VDDIO6
VDDIO8
VDDIO_SMIF0
VDDIO_SMIF1
VOUT_1P8
VSS_1P8
VFB_1P8
VDD_USB
VDD_DSI
VDD/VDDIO_1V8
VDD/VDDA_1V8
VCC_VLDO_SRAM
VCC_VLDO_DSI
VLDO_RET
VDDUSB_3V3
L1
2.2uH
120 OHM
Power Nets
VDD_3V3
R240
0 OHM
VDD_1V8
FB9
FB12
FB11
VDD/VDDIO_PERI_1V8
TP1
TP2
TP3
TP4
TP5
TP6
Legal Disclaimer :
The information given in this document shall in no event be regarded as a guarantee of conditions or characteristics. With respect to any examples or hints given herein, any typical values stated herein and/or any information regarding the application of the device, Infineon Technologies hereby disclaims any and all warranties and liabilities of any kind, including without limitation, warranties of non-infringement of intellectual property rights of any third party.
SCH Title : PSOC™ Edge E84 Glasses WLB154
Page Title: MCU POWER SECTION
Size A4
Document Number
Drawn By DEEPAK
Approved By ASHUTOSH
Rev 0.1
Date: Tuesday, June 02, 2026
Sheet 3 of 17

PSOC™ Edge E84 GPIO mapping (1)

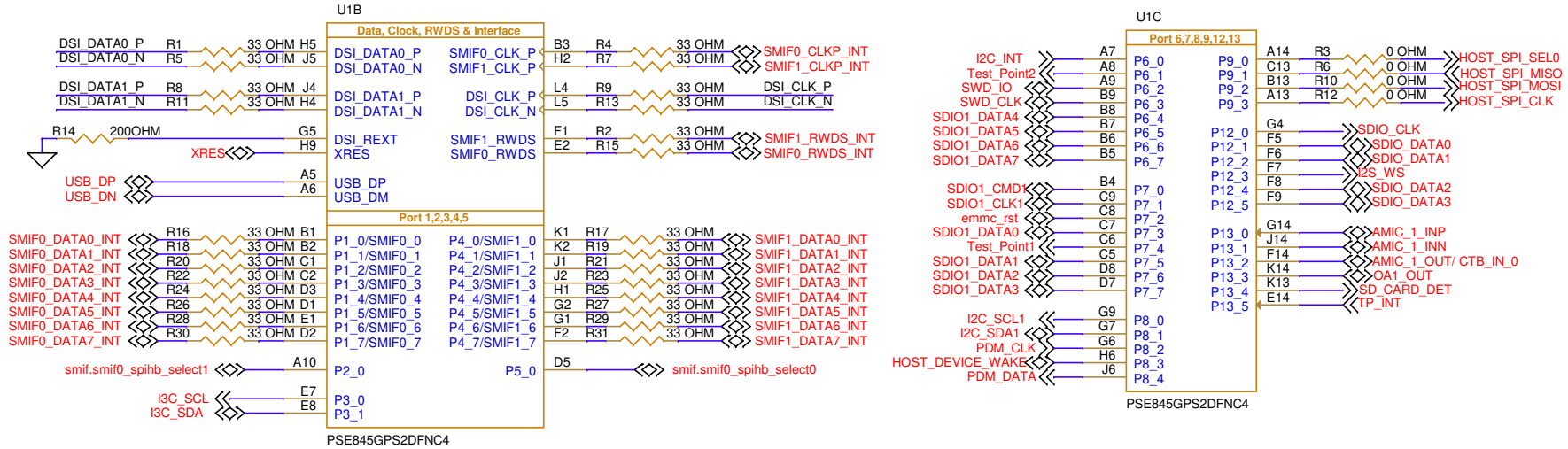

PSOC™ Edge E84 SWD Header

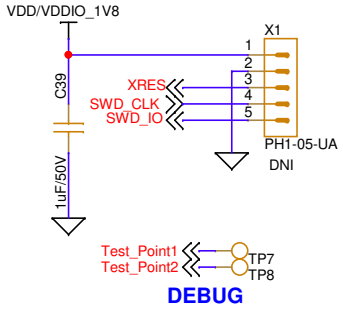

Display Interface

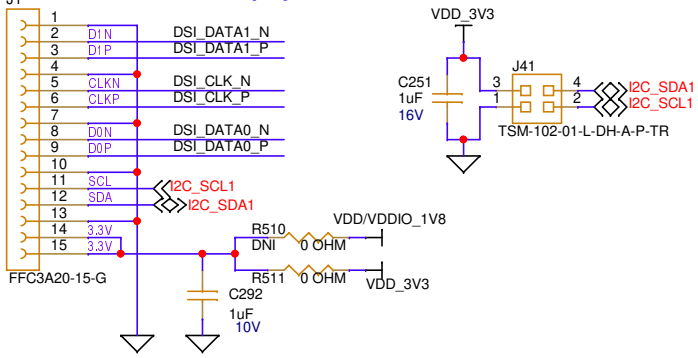

Note:

VDD_3V3 or VDD/VDDIO_1V8 is input for display
J41 is used for display backlight

Optional QSPI Display interface

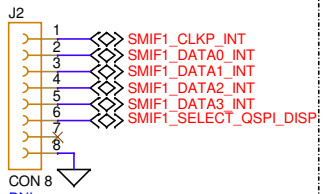

Speaker Drive Op_Amp

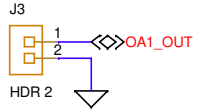

Optional MEMORY_RST Control



Legal Disclaimer :

The information given in this document shall in no event be regarded as a guarantee of conditions or characteristics. With respect to any examples or hints given herein, any typical values stated herein and/or any information regarding the application of the device, Infineon Technologies hereby disclaims any and all warranties and liabilities of any kind, including without limitation, warranties of non-infringement of intellectual property rights of any third party.

SCH Title : PSOC™ Edge E84 Glasses WLB154				
Page Title: MCU SIGNAL_1				
Size	Document Number	Drawn By	Approved By	Rev
A4				0.1
Date: Tuesday, June 09, 2026			Sheet 4 of 17	

PSOC™ Edge E84 GPIO mapping (2)

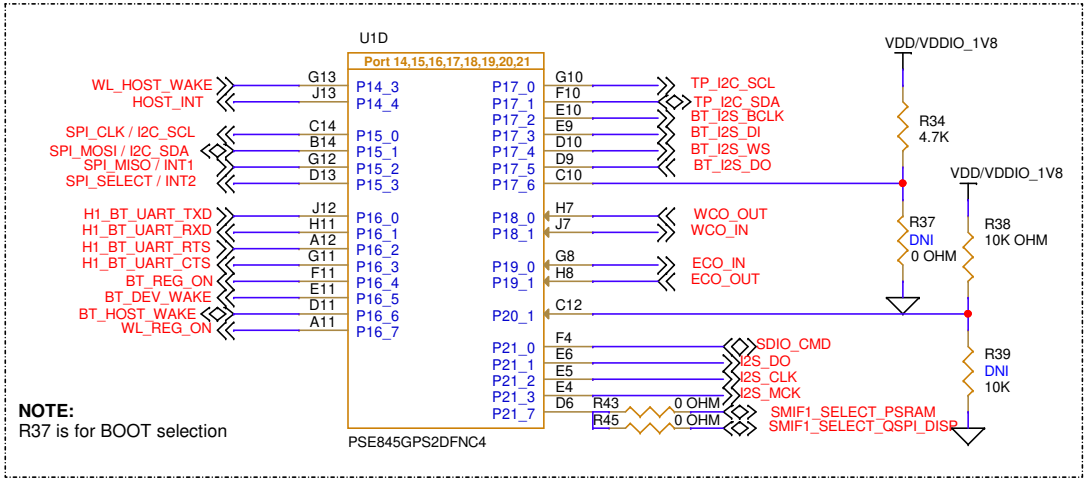

NOTE:
R37 is for BOOT selection

Optional UART Debug

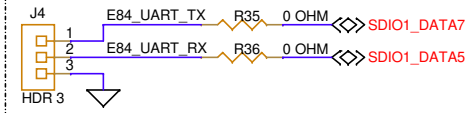

USB Multiplexing

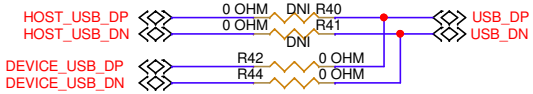

Sensor Hub Interface

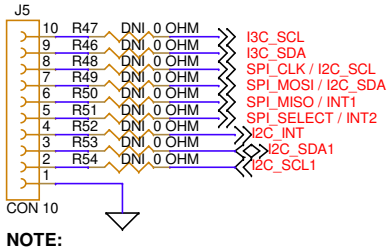

NOTE:
Mount R46 to R54 for External Sensors Interface

HOST Interface

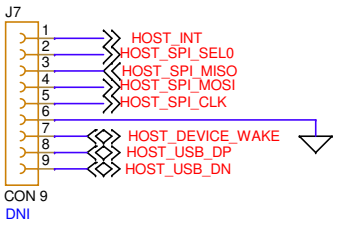

Speaker Header

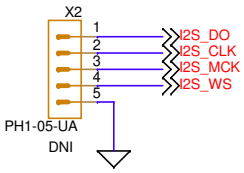

PSOC™ Edge E84 USB Type-C Connector

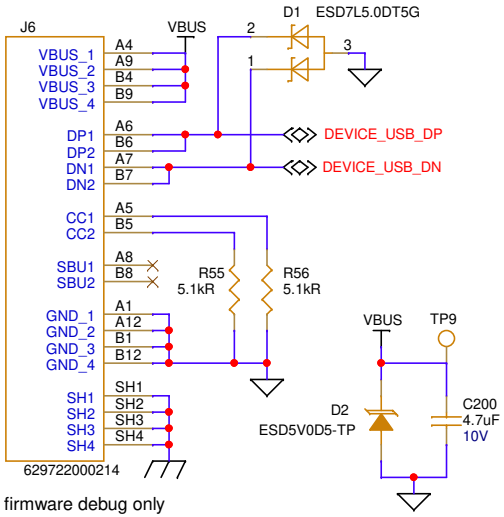

NOTE:
Audio class firmware debug only

Legal Disclaimer :
The information given in this document shall in no event be regarded as a guarantee of conditions or characteristics. With respect to any examples or hints given herein, any typical values stated herein and/or any information regarding the application of the device, Infineon Technologies hereby disclaims any and all warranties and liabilities of any kind, including without limitation, warranties of non-infringement of intellectual property rights of any third party.

SCH Title : PSOC™ Edge E84 Glasses WLB154				
Page Title: MCU SIGNAL_2				
Size: A4	Document Number:	Drawn By:	Approved By:	Rev: 0.1
Date: Tuesday, June 02, 2026			Sheet 5 of 17	

Reset Button

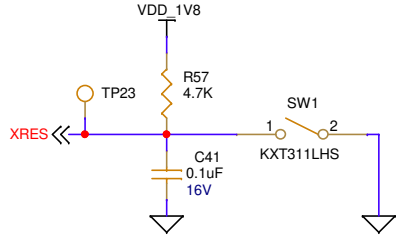

ECO

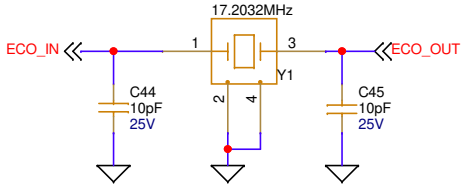

WCO

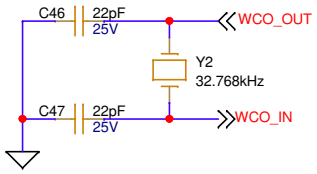

Load Switch

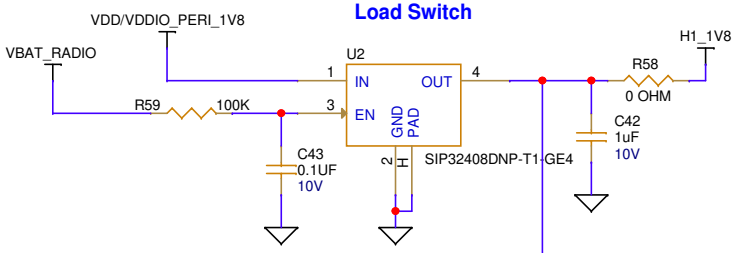

Power LED

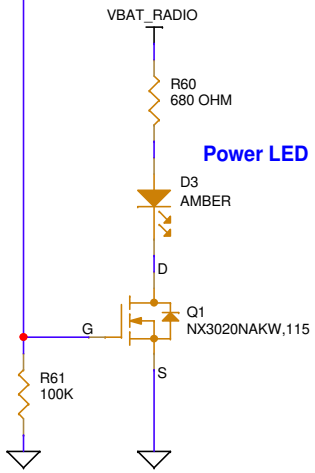

Legal Disclaimer :
The information given in this document shall in no event be regarded as a guarantee of conditions or characteristics. With respect to any examples or hints given herein, any typical values stated herein and/or any information regarding the application of the device, Infineon Technologies hereby disclaims any and all warranties and liabilities of any kind, including without limitation, warranties of non-infringement of intellectual property rights of any third party.

SCH Title : PSOC™ Edge E84 Glasses WLB154				
Page Title: MCU MISCELLANEOUS				
Size	Document Number	Drawn By	Approved By	Rev
A4				0.1
Date: Monday, June 01, 2026			Sheet 6 of 17	

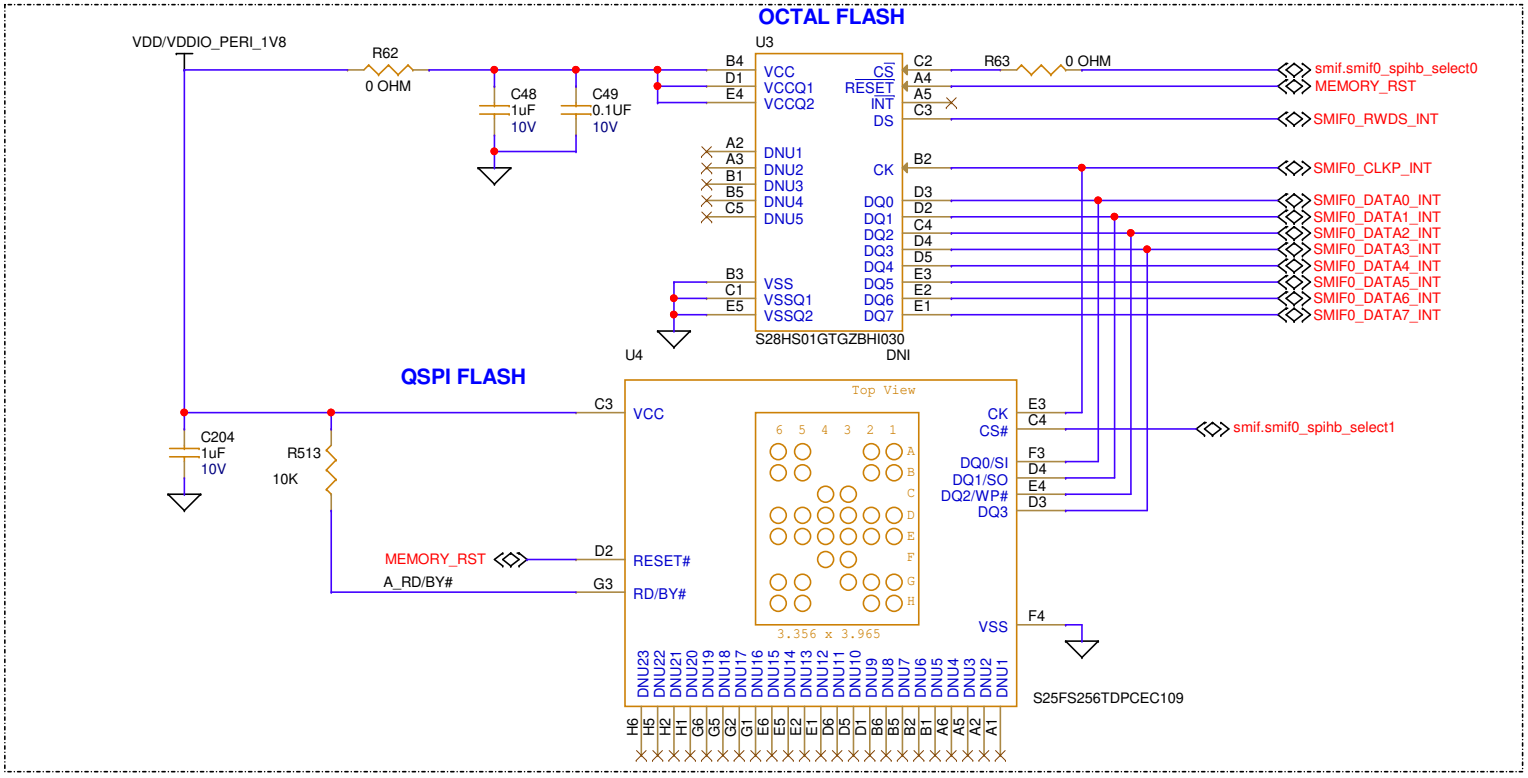

Legal Disclaimer :

The information given in this document shall in no event be regarded as a guarantee of conditions or characteristics. With respect to any examples or hints given herein, any typical values stated herein and/or any information regarding the application of the device, Infineon Technologies hereby disclaims any and all warranties and liabilities of any kind, including without limitation, warranties of non-infringement of intellectual property rights of any third party.

SCH Title : PSOC™ Edge E84 Glasses WLB154				
Page Title: SMIF INTERFACE				
Size: A4	Document Number:	Drawn By: DEEPAK	Approved By: ASHUTOSH	Rev: 0.1
Date: Tuesday, June 09, 2026		Sheet 7 of 17		

AMIC Signal Processing

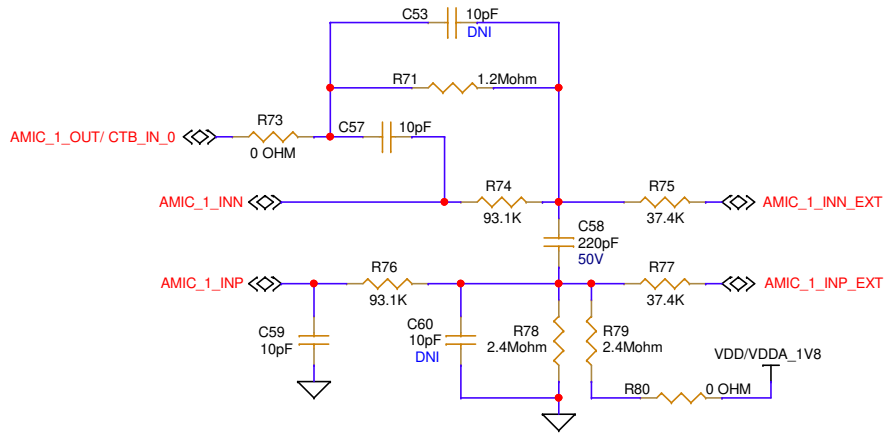

Analog MICs

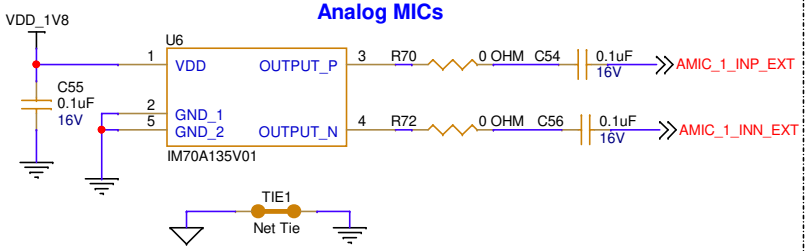

PDM MICs

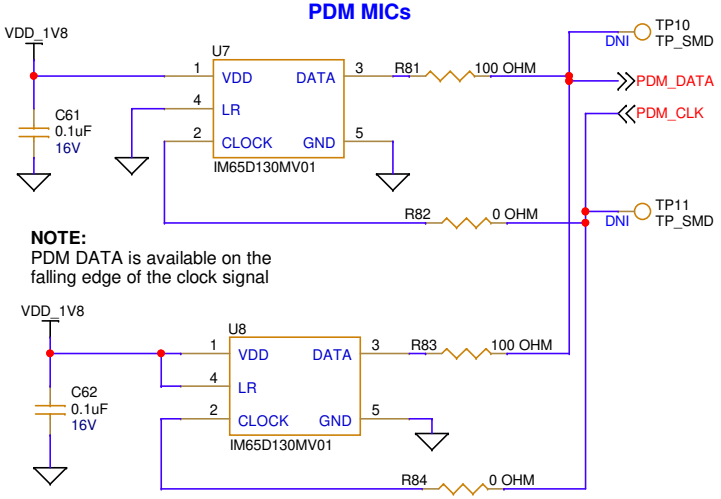

Legal Disclaimer :
The information given in this document shall in no event be regarded as a guarantee of conditions or characteristics. With respect to any examples or hints given herein, any typical values stated herein and/or any information regarding the application of the device, Infineon Technologies hereby disclaims any and all warranties and liabilities of any kind, including without limitation, warranties of non-infringement of intellectual property rights of any third party.

SCH Title : PSOC™ Edge E84 Glasses WLB154				
Page Title: AMICs & DMICs				
Size: A4	Document Number:	Drawn By:	Approved By:	Rev: 0.1
Date: Tuesday, June 09, 2026			Sheet 8 of 17	

Radio Power (1)

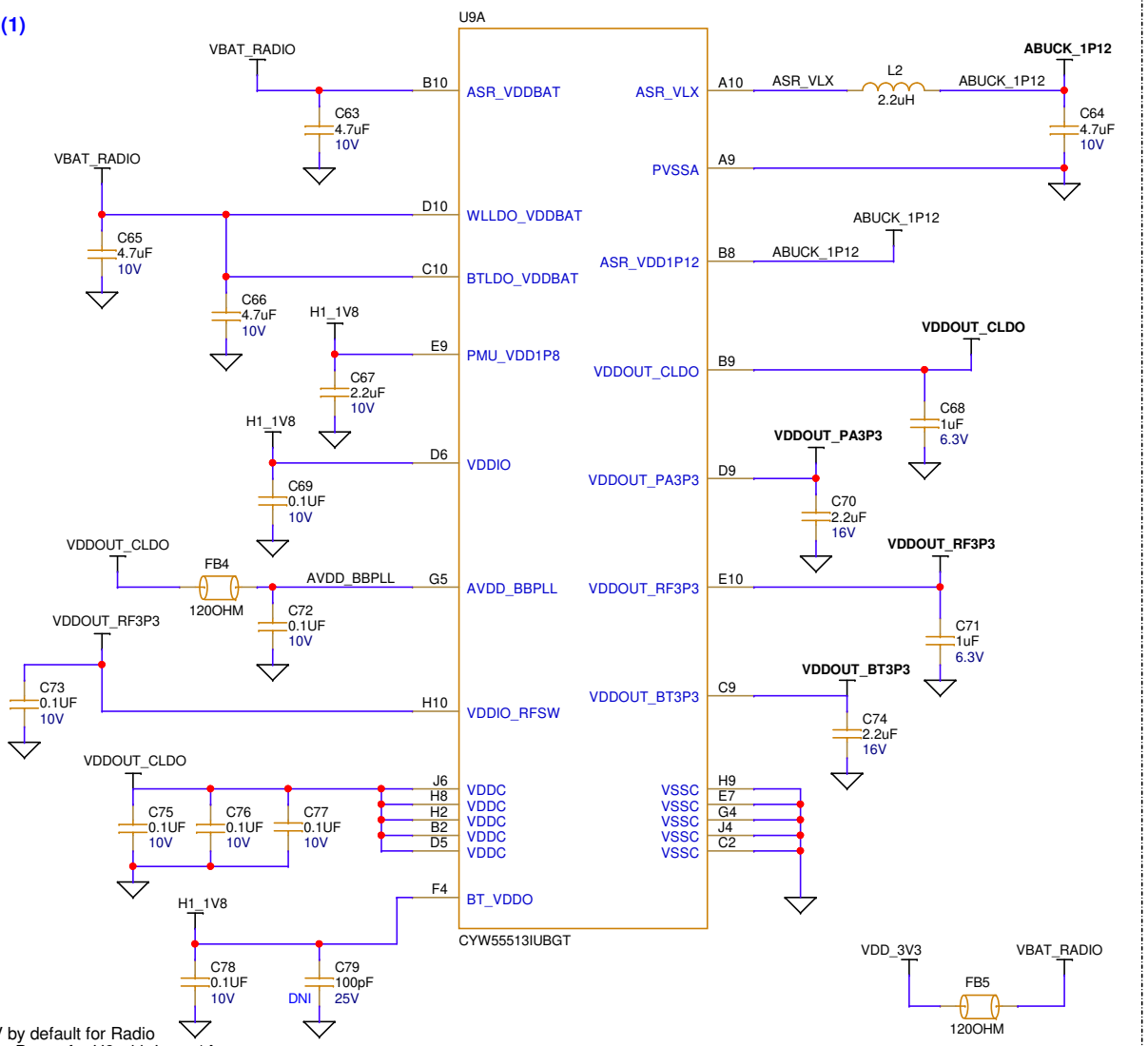

NOTE:

VBAT_RADIO is 3.3V by default for Radio
VBAT_RADIO is Input Power for U9 with Imax 1A

Legal Disclaimer :
The information given in this document shall in no event be regarded as a guarantee of conditions or characteristics. With respect to any examples or hints given herein, any typical values stated herein and/or any information regarding the application of the device, Infineon Technologies hereby disclaims any and all warranties and liabilities of any kind, including without limitation, warranties of non-infringement of intellectual property rights of any third party.

SCH Title : PSOC™ Edge E84 Glasses WLB154				
Page Title: RADIO PMU TOPOLOGY_1				
Size	Document Number	Drawn By	Approved By	Rev
A4		DEEPAK	ASHUTOSH	0.1
Date: Monday, June 01, 2026		Sheet 9 of 17		

Radio Power (2)

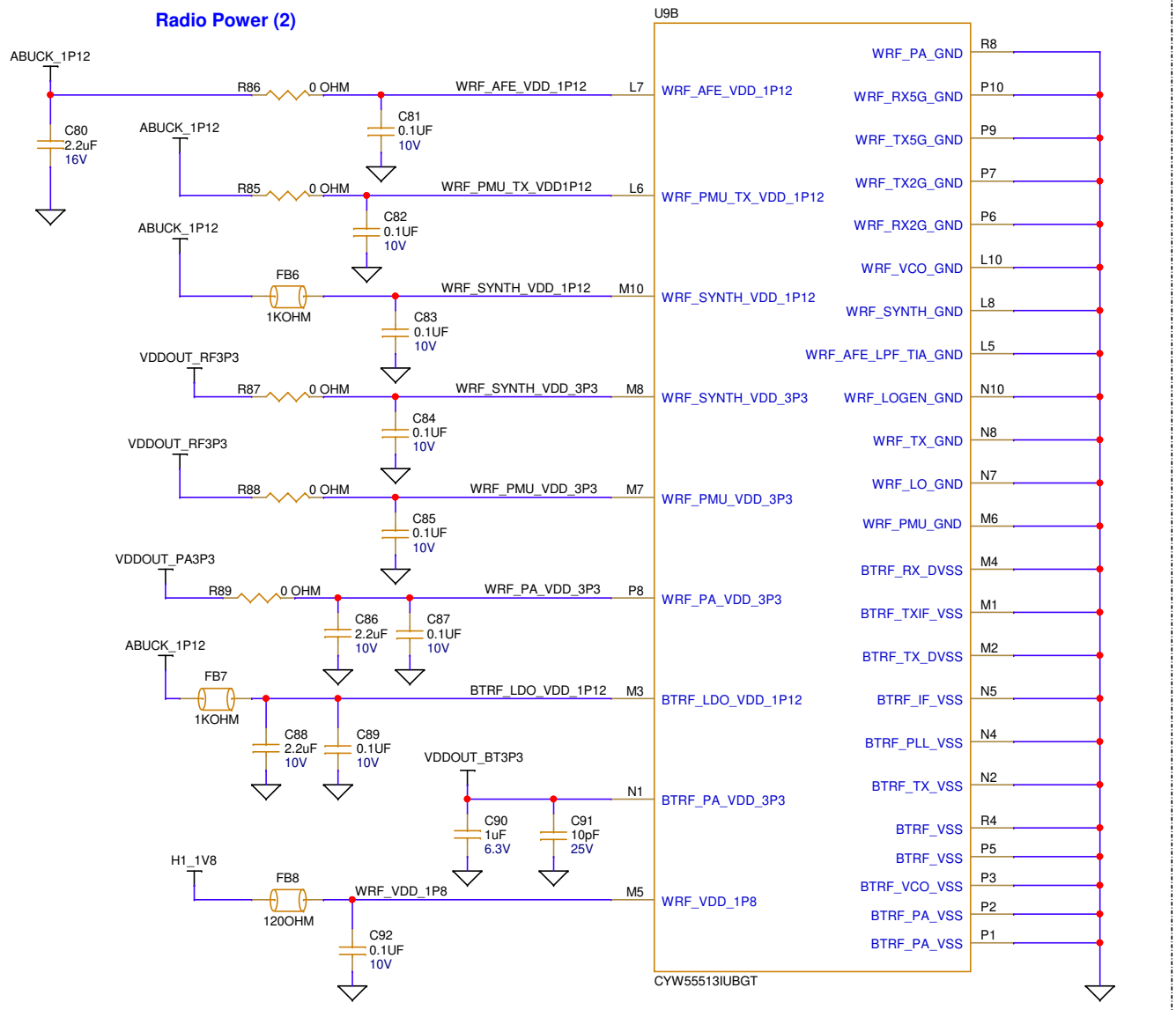

Legal Disclaimer :
The information given in this document shall in no event be regarded as a guarantee of conditions or characteristics. With respect to any examples or hints given herein, any typical values stated herein and/or any information regarding the application of the device, Infineon Technologies hereby disclaims any and all warranties and liabilities of any kind, including without limitation, warranties of non-infringement of intellectual property rights of any third party.

SCH Title : PSOC™ Edge E84 Glasses WLB154				
Page Title: RADIO PMU TOPOLOGY_2				
Size	Document Number	Drawn By	Approved By	Rev
A4		DEEPAK	ASHUTOSH	0.1
Date: Monday, June 01, 2026			Sheet 10 of 17	

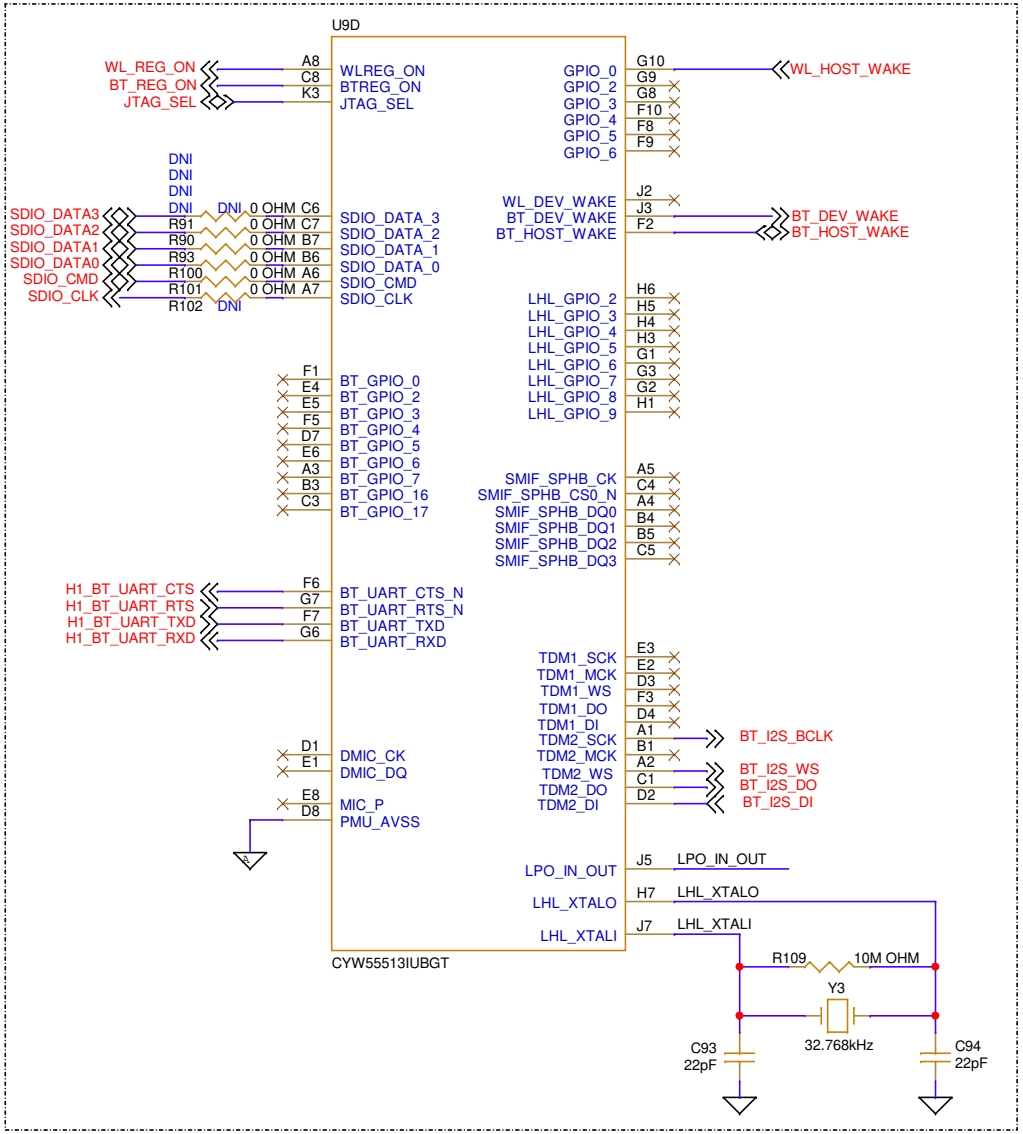

Radio Subsystem

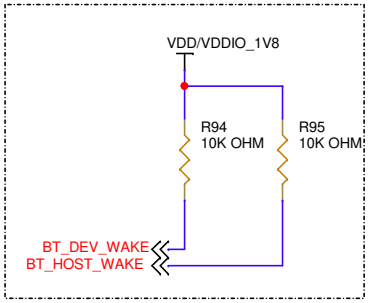

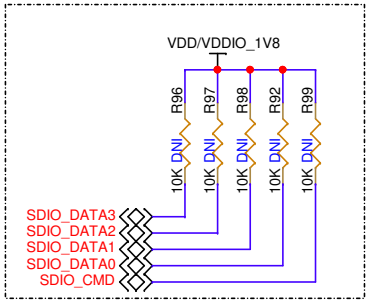

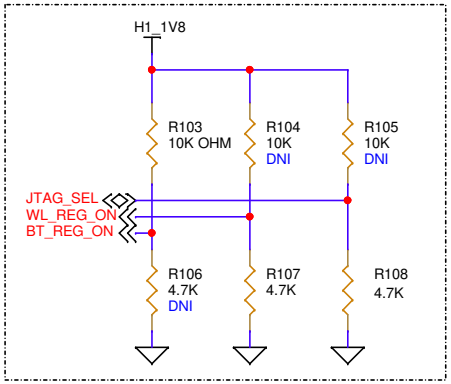

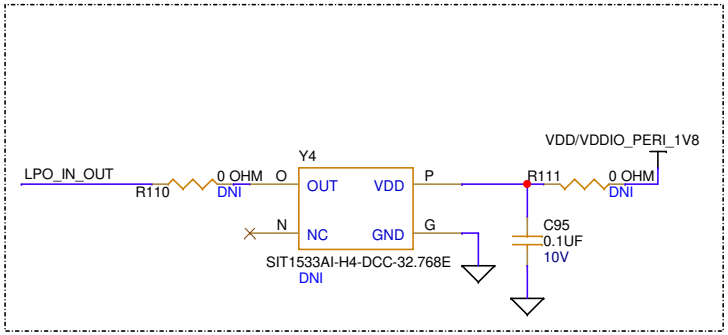

Legal Disclaimer :
The information given in this document shall in no event be regarded as a guarantee of conditions or characteristics. With respect to any examples or hints given herein, any typical values stated herein and/or any information regarding the application of the device, Infineon Technologies hereby disclaims any and all warranties and liabilities of any kind, including without limitation, warranties of non-infringement of intellectual property rights of any third party.

SCH Title : PSOC™ Edge E84 Glasses WLB154				
Page Title: RADIO SYSTEM SECTION				
Size: A4	Document Number:	Drawn By: DEEPAK	Approved By: ASHUTOSH	Rev: 0.1
Date: Monday, June 01, 2026		Sheet 11 of 17		

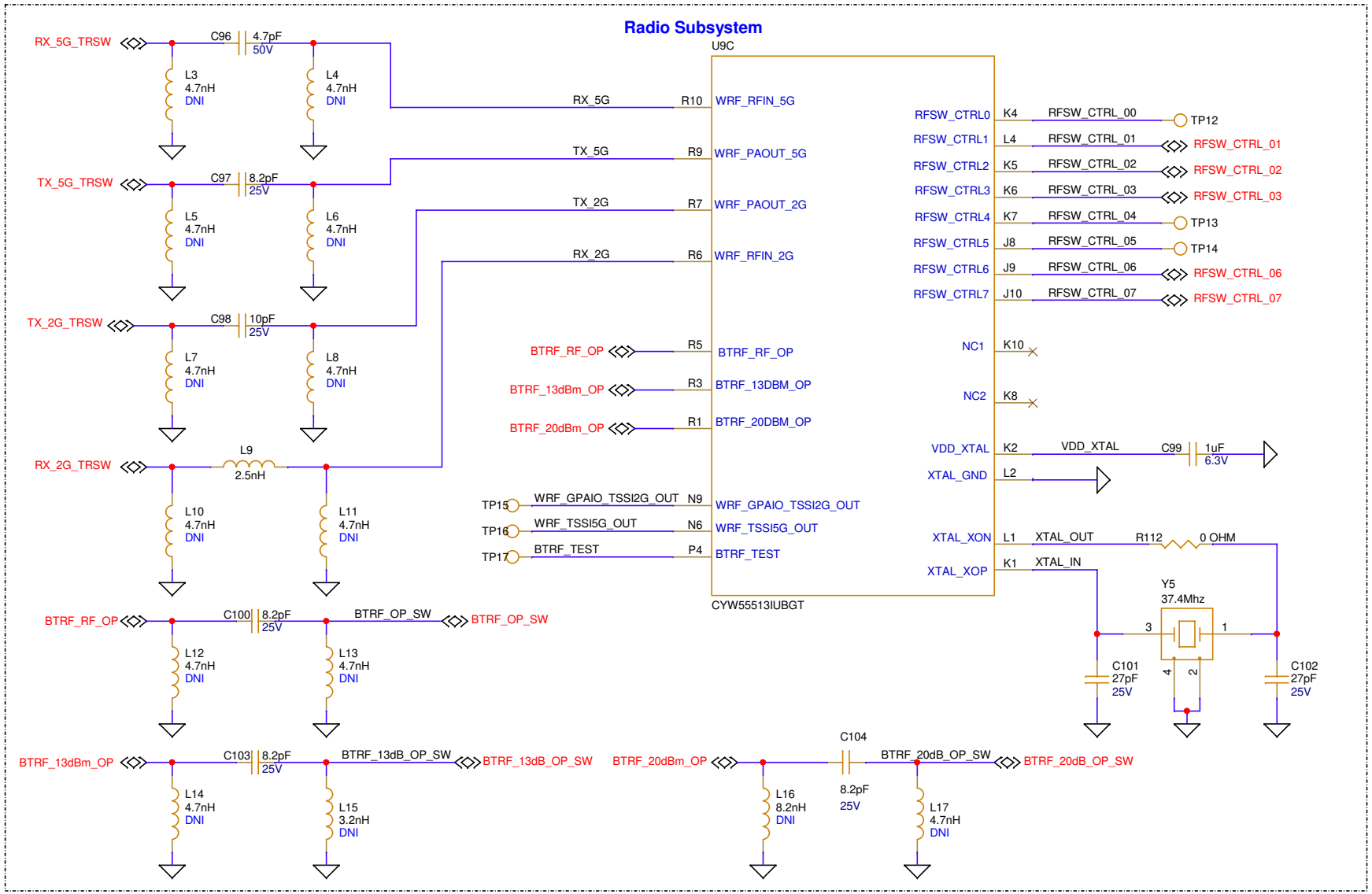

Legal Disclaimer :
The information given in this document shall in no event be regarded as a guarantee of conditions or characteristics. With respect to any examples or hints given herein, any typical values stated herein and/or any information regarding the application of the device, Infineon Technologies hereby disclaims any and all warranties and liabilities of any kind, including without limitation, warranties of non-infringement of intellectual property rights of any third party.

SCH Title : PSOC™ Edge E84 Glasses WLB154				
Page Title: RADIO RF SECTION				
Size: A4	Document Number:	Drawn By:	Approved By:	Rev: 0.1
Date: Monday, June 01, 2026			Sheet 12 of 17	

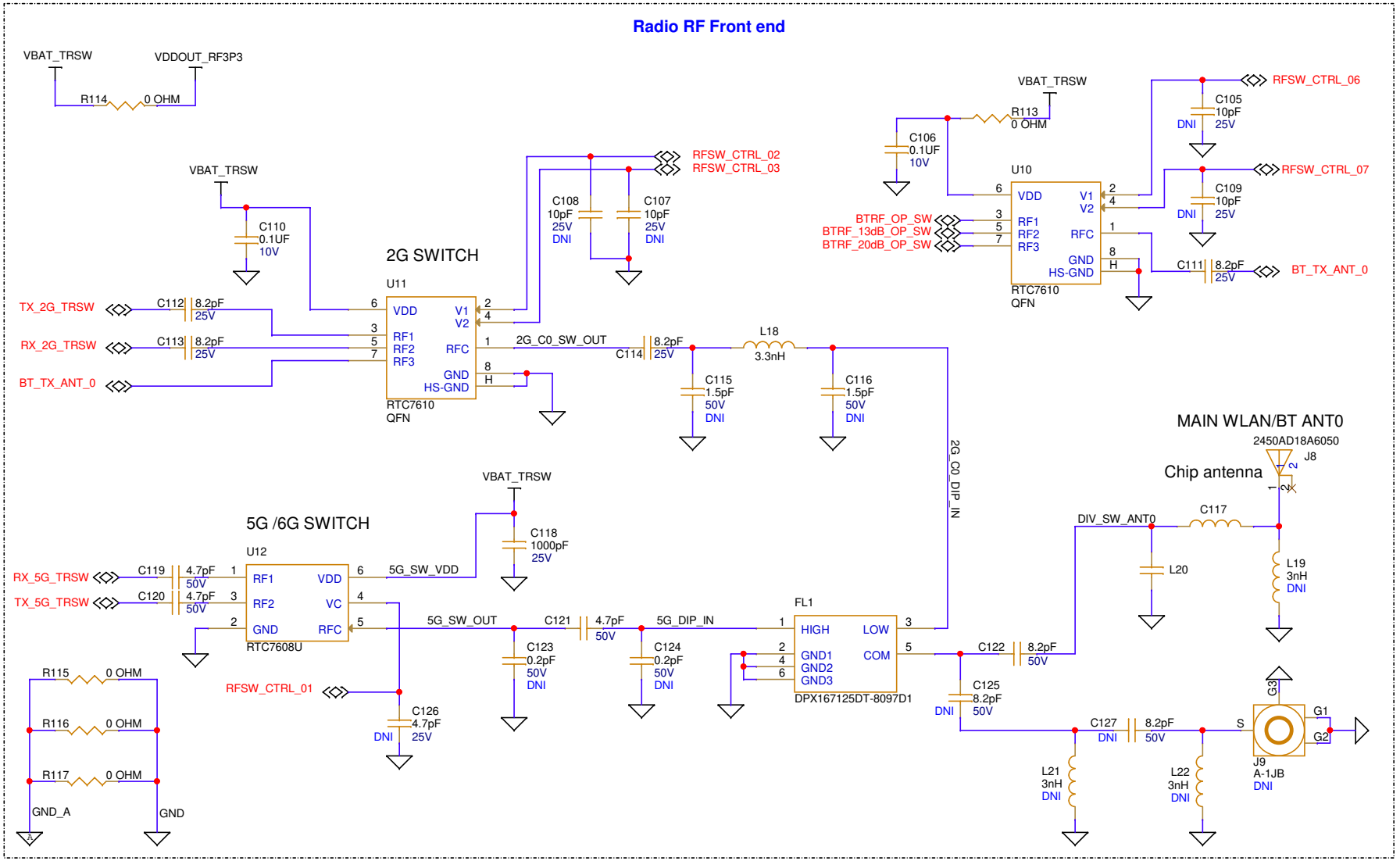

Legal Disclaimer :
The information given in this document shall in no event be regarded as a guarantee of conditions or characteristics. With respect to any examples or hints given herein, any typical values stated herein and/or any information regarding the application of the device, Infineon Technologies hereby disclaims any and all warranties and liabilities of any kind, including without limitation, warranties of non-infringement of intellectual property rights of any third party.

SCH Title : PSOC™ Edge E84 Glasses WLB154				
Page Title: RADIO RF FRONT END				
Size	Document Number	Drawn By	Approved By	Rev
A4		DEEPAK	ASHUTOSH	0.1
Date: Monday, June 01, 2026			Sheet 13 of 17	

3-axis Magnetometer

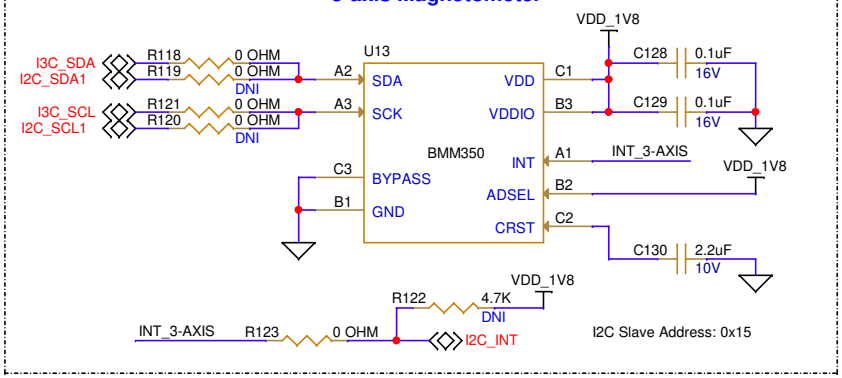

6-axis IMU (Accelerometer + Gyroscope)

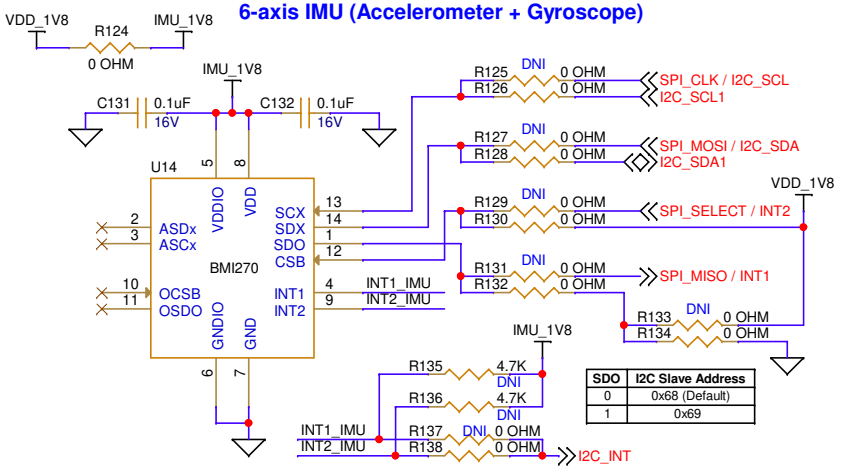

NOTE: I2C_SDA1 & I2C_SCL1 are shared with DSI Display
I2C interface is set as default. To change to SPI interface, do the following rework:
Mount: R125, R127, R129, R131
Remove: R126, R130, R128, R132

Legal Disclaimer :
The information given in this document shall in no event be regarded as a guarantee of conditions or characteristics. With respect to any examples or hints given herein, any typical values stated herein and/or any information regarding the application of the device, Infineon Technologies hereby disclaims any and all warranties and liabilities of any kind, including without limitation, warranties of non-infringement of intellectual property rights of any third party.

SCH Title : PSOC™ Edge E84 HMI Kit Baseboard				
Page Title: MAGNETOMETER, IMU				
Size: A4	Document Number:	Drawn By: DEEPAK	Approved By: ASHUTOSH	Rev: 0.1
Date: Monday, June 01, 2026		Sheet 14 of 17		

PSoC™ 4000T Device IOs

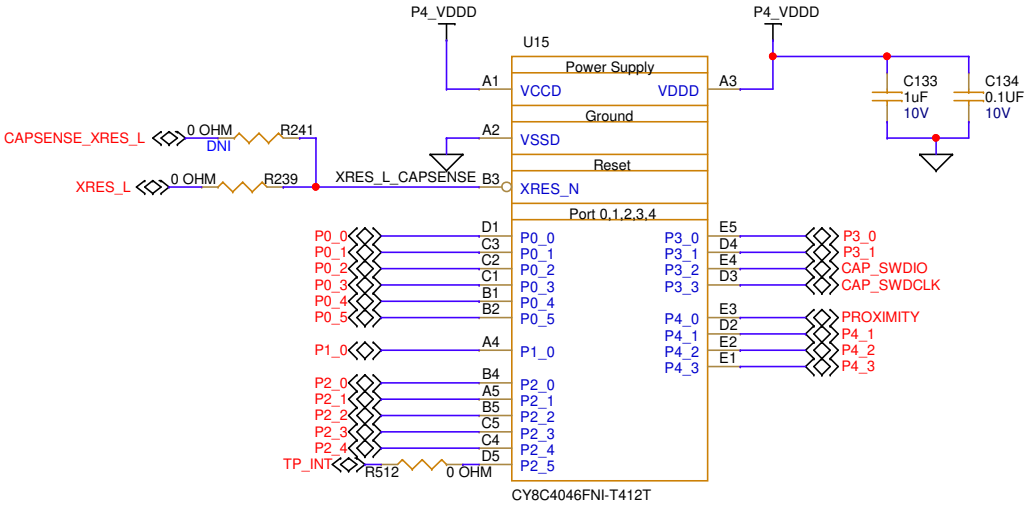

CMOD Capacitors

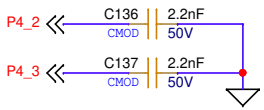

PSoC™ 4000T Device Power

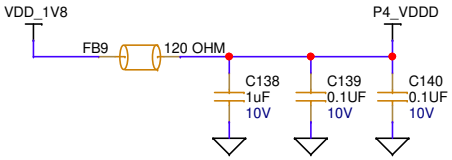

PSoC™ 4000T Device 5-pin SWD Test Point

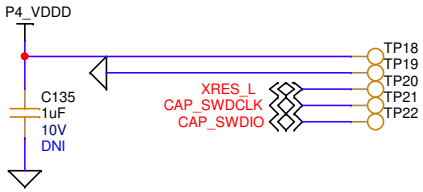

Explorer I2C interface

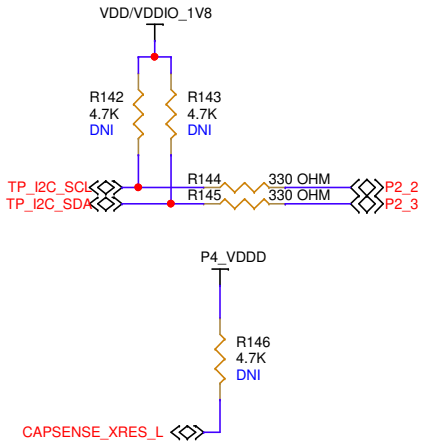

CAPSENSE HEADER

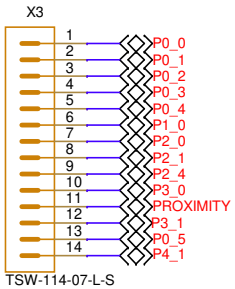

Legal Disclaimer :
The information given in this document shall in no event be regarded as a guarantee of conditions or characteristics. With respect to any examples or hints given herein, any typical values stated herein and/or any information regarding the application of the device, Infineon Technologies hereby disclaims any and all warranties and liabilities of any kind, including without limitation, warranties of non-infringement of intellectual property rights of any third party.

SCH Title : PSOC™ Edge E84 SoM				
Page Title: CAPSENSE COPROCESSOR ARCHES				
Size: A4	Document Number:	Drawn By: DEEPAK	Approved By: ASHUTOSH	Rev: 0.1
Date: Monday, June 08, 2026		Sheet 15 of 17		

Level Translator for MicroSD Card

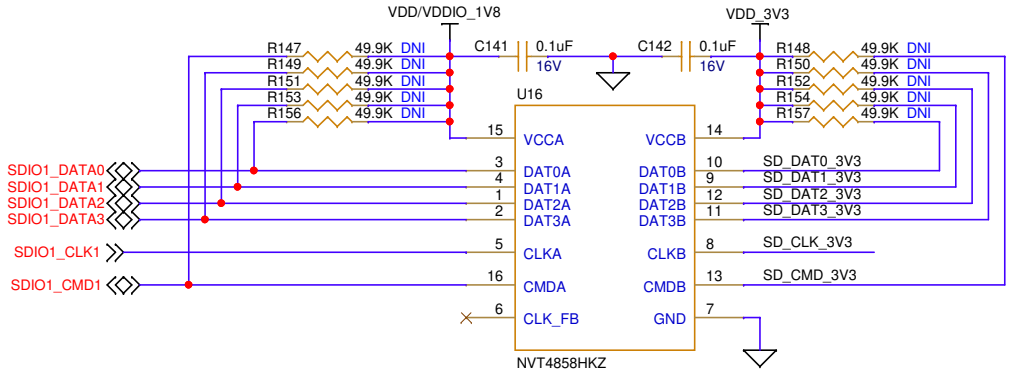

MicroSD Card Interface

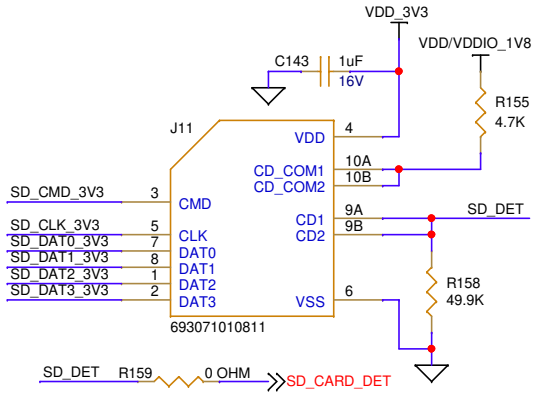

Expansion Header

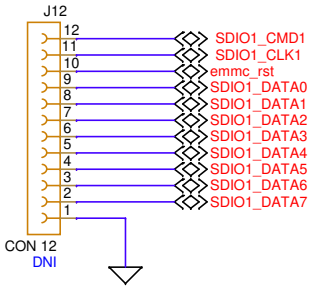

Legal Disclaimer :
The information given in this document shall in no event be regarded as a guarantee of conditions or characteristics. With respect to any examples or hints given herein, any typical values stated herein and/or any information regarding the application of the device, Infineon Technologies hereby disclaims any and all warranties and liabilities of any kind, including without limitation, warranties of non-infringement of intellectual property rights of any third party.

SCH Title : PSOC™ Edge E84 Glasses WLB154				
Page Title: MICRO SD CARD				
Size: A4	Document Number:	Drawn By:	Approved By:	Rev: 0.1
Date: Monday, June 01, 2026			Sheet 16 of <Page Count>	

REVISION HISTORY

REV	DESCRIPTION OF CHANGE	Orig. of Change	DATE
0.1	Initial Draft	INFINEON	27/04/2026
0.2	-Added USB-C connector -Added Connector for the DSI Display -Added Beads for VBAT_RADIO & VDD/VDDIO_1V8 -Swapped the BT_I2S_DO and BT_I2S_DI nets -Added pull up at BOOT Selection pin - Added IMU & Maganetometer -	INFINEON	29/05/2026
0.3	-Part no. updated for U4, U6, U7, U8 & U15	INFINEON	09/06/2026

Legal Disclaimer :
The information given in this document shall in no event be regarded as a guarantee of conditions or characteristics. With respect to any examples or hints given herein, any typical values stated herein and/or any information regarding the application of the device, Infineon Technologies hereby disclaims any and all warranties and liabilities of any kind, including without limitation, warranties of non-infringement of intellectual property rights of any third party.

SCH Title : KIT-55913-PROTO

Page Title: Revision History

Size	Document Number	Drawn By	Approved By	Rev
A3	<Doc>	DEEPAK	ASHUTOSH	0.1

Date: Tuesday, June 09, 2026 Sheet 17 of 17